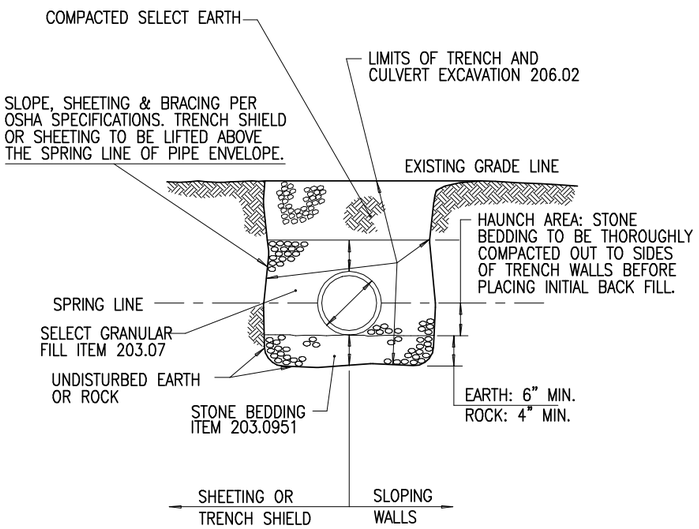

NOTE:
WHERE DRAIN LINE CROSSES PREVIOUSLY INSTALLED SANITARY SEWER, WATER OR GAS MAIN, ETC. TRENCH SHALL BE EXCAVATED DOWN TO THE PREVIOUSLY LAID CONDUIT AND BACKFILLED WITH COMPACTED #2 CRUSHER RUN STONE TO INSURE ADEQUATE SUPPORT.

DRAIN LINE BEDDING

NOT TO SCALE – REVISED: 06/12/23

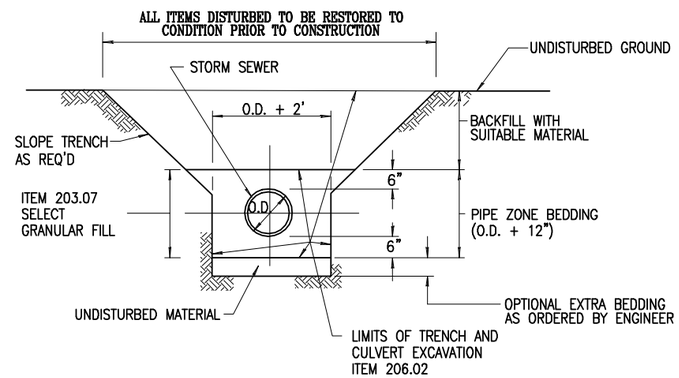

NOTES
1. SLOPE, SHEETING & BRACING PER OSHA SPECIFICATIONS. TRENCH SHIELD OR SHEETING TO BE LIFTED ABOVE THE SPRING LINE.
2. WHERE STORM SEWER CROSSES PREVIOUSLY INSTALLED SANITARY SEWER, WATER OR GAS MAIN, ETC. TRENCH SHALL BE EXCAVATED DOWN TO THE PREVIOUSLY LAID UTILTY AND BACKFILLED WITH #2 CRUSHED STONE COMPACTED IN 6" LIFTS TO INSURE ADEQUATE SUPPORT.
3. 6" STONE BEDDING, CONSISTING OF A BLENDING OF #1 AND #2 STONE, IS REQUIRED FOR SANITARY AND STORM SEWER INSTALLATIONS WITH CRUSHED STONE HAUNCHING TO A MINIMUM OF ONE-HALF OF THE PIPE DIAMETER ON THE SIDE OF THE PIPE. PAYMENT TO BE INCLUDED UNDER ITEM 203.07 SELECT GRANULAR FILL.

STORM SEWER TRENCH IN GRASS AREA

NOT TO SCALE – REVISED: 06/12/23

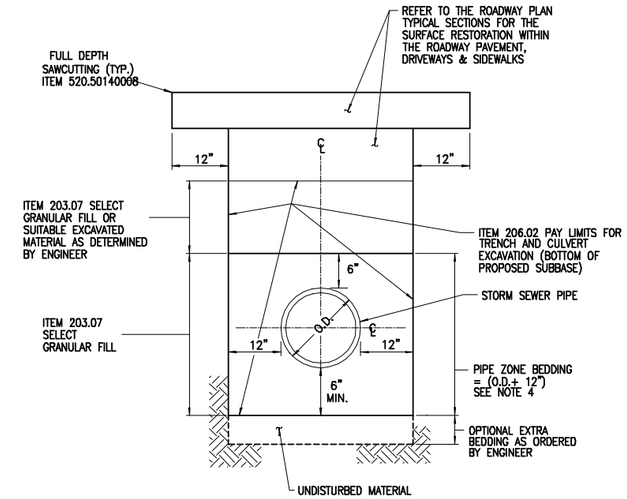

NOTES:
1. REMOVE EXISTING PAVEMENT AND SUBBASE UNDER ITEM 203.02. WHERE SEWER IS INSTALLED PRIOR TO BOX OUT, THE UPPER PAY LIMIT FOR ITEM 206.02 SHALL BE EXISTING GROUND. BACKFILL WILL BE MADE WITH ITEM 203.07 TO THE BOTTOM OF TEMPORARY PAVEMENT, OR TO THE BOTTOM OF SUBBASE.
2. SLOPE SHEETING & BRACING PER OSHA, SPECIFICATION. TRENCH SHIELD OR SHEETING TO BE LIFTED ABOVE THE SPRING LINE.
3. WHERE STORM SEWER CROSSES PREVIOUSLY INSTALLED SANITARY SEWER, WATER OR GAS MAIN, ETC. TRENCH SHALL BE EXCAVATED DOWN TO THE PREVIOUSLY LAID UTILTY AND BACKFILL WITH #2 CRUSHED STONE COMPACTED IN 6" LIFTS TO INSURE ADEQUATE SUPPORT.
4. 6" STONE BEDDING, CONSISTING OF A BLENDING OF #1 AND #2 STONE, IS REQUIRED FOR SANITARY AND STORM SEWER INSTALLATIONS WITH CRUSHED STONE HAUNCHING TO A MINIMUM OF ONE-HALF OF THE PIPE DIAMETER ON THE SIDE OF THE PIPE. PAYMENT TO BE INCLUDED UNDER ITEM 203.07 SELECT GRANULAR FILL.

STORM SEWER TRENCH IN PAVED AREA

NOT TO SCALE – REVISED: 06/12/23

NO.	DATE	BY:	REVISION

CONSULTANT
Consultant Address
Rochester, New York XXXXX
(585) 867-5309
Fax: (585) 867-5309

DRAWN BY: DRAFTER
PROJECT MANAGER: MANAGER

DEPARTMENT OF TRANSPORTATION
50 WEST MAIN STREET, SUITE 6100
ROCHESTER, NEW YORK 14614-1231

UNAUTHORIZED ALTERATION OR ADDITION TO THIS DRAWING IS A VIOLATION OF THE NEW YORK STATE EDUCATION LAW ARTICLE 145, SECTION 7209

COUNTY ROAD #
PROJECT NAME
PROJECT NAME
LIMITS
PROJECT LIMITS
TOWN
TOWN
CAPITAL PROJECT NO.
XXXX.XX

SCALE: NOT TO SCALE
DATE ISSUED: DATE
DRAWING NO.